REV.	ECN NO.	LOCAS.	DESCRIPTION	DATE	DESIGN
A0			RELEASE TO CUSTOMER	150116	HANG

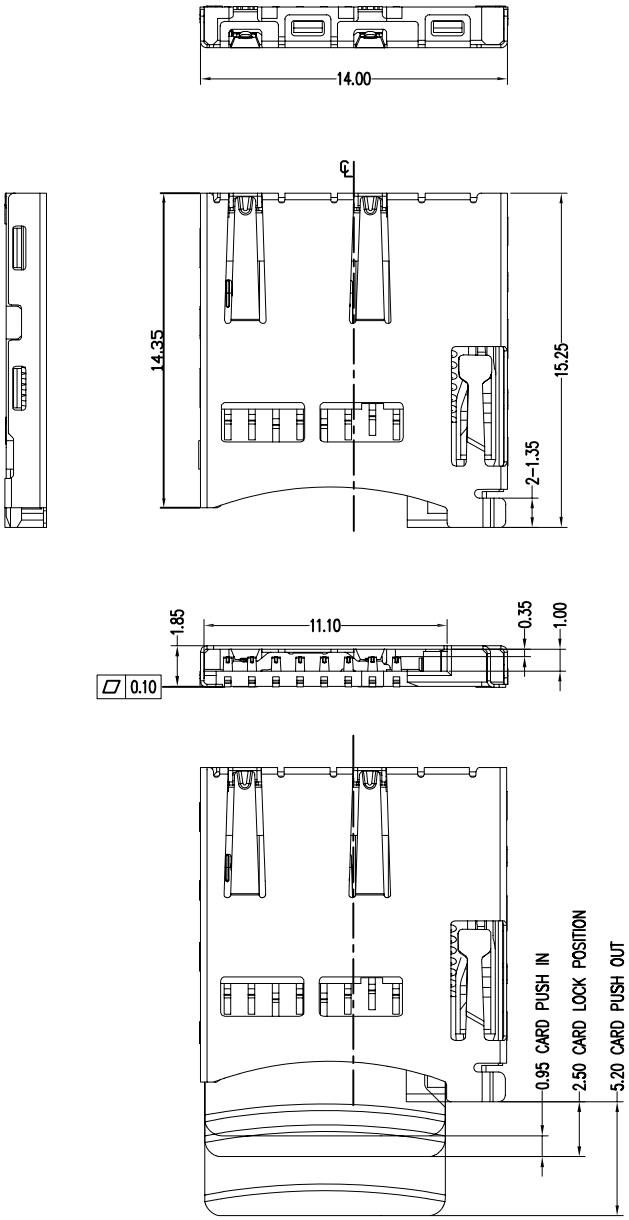

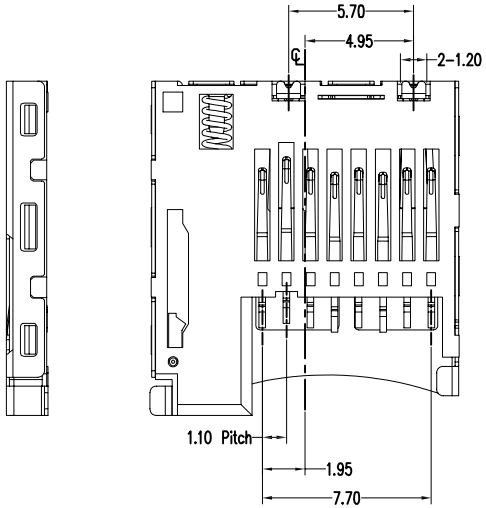

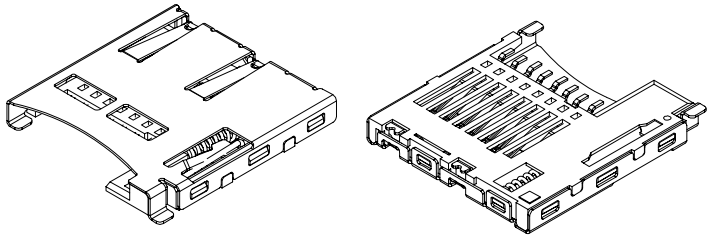

SPECIFICATION

1.ELECTRICAL CHARACTERISTIES:
- CONTACT CURRENT RATING:0.5 AMPERES.
- DIELECTRIC WITHSTANDING VOLTAGE:AC500VR.M.S.
- LLNSULATION RESISTANTE:1000MΩ MINIMUM.
- CONTACT RESISTANTE:100mΩ MAXIMUM.

2.MECHANICAL CHARACTERISTICS:
- MATING CYELES:5,000 INSERTIONS.
- INSERTION FORCE: 2.0KGF MAX.
- EXTRACTION FORCE: 0.4KGF MIN.

2.ENVIRONMENTAL:
- OPERATING TEMPERATURE:-20℃~+85℃.

3.MATERIAL:
- HOUSING:H1-TEMP PLASTIC LCP UL 94V-0 RATED
- CANTACT:COPPER ALLOY(T=0.15MM).
- SHELL:STAINLESS STEEL(T=0.15MM).

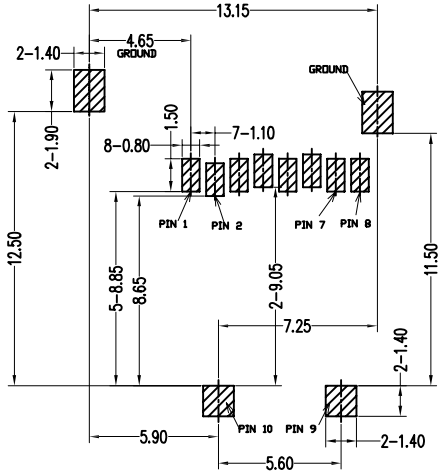

RECOMMENDED PCB LAYOUT
(ALL TOLERANCE ARE ±0.05)

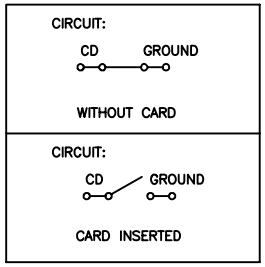

DIM	TOL	DIM	TOL
X.	±0.30	X°.	±4.0°
X.X	±0.25	X.X°	±3.0°
X.XX	±0.20	X.XX°	±2.0°
X.XXX	±0.10	X.XXX°	±1.0°

THIS DRAWING CONTAINS INFORMATION THAT IS PROVIDED BY LASTAR TECHNOLOGY AND SHOULD NOT BE USED WITHOUT WRITTEN PERMISSION

LASTAR
Lastar Technology CO.,LTD
TEL:0755-27157971 FAX:0755-27157976 Http://www.lsdconn.com

DRAW NO.	070-C40-0804	DATE	DRAW NAME:	T-Flash Card Push 1.85H 内焊
DESIGN	HANG	150116		
CHECK	WANGCM	150116	P/N NO. TF-070-C40-0804	FILE:
APPROVED	HUYX	150116	UNIT: mm / SHEET: N/A	MODEL:
				REV. A0 / SCALE N/A